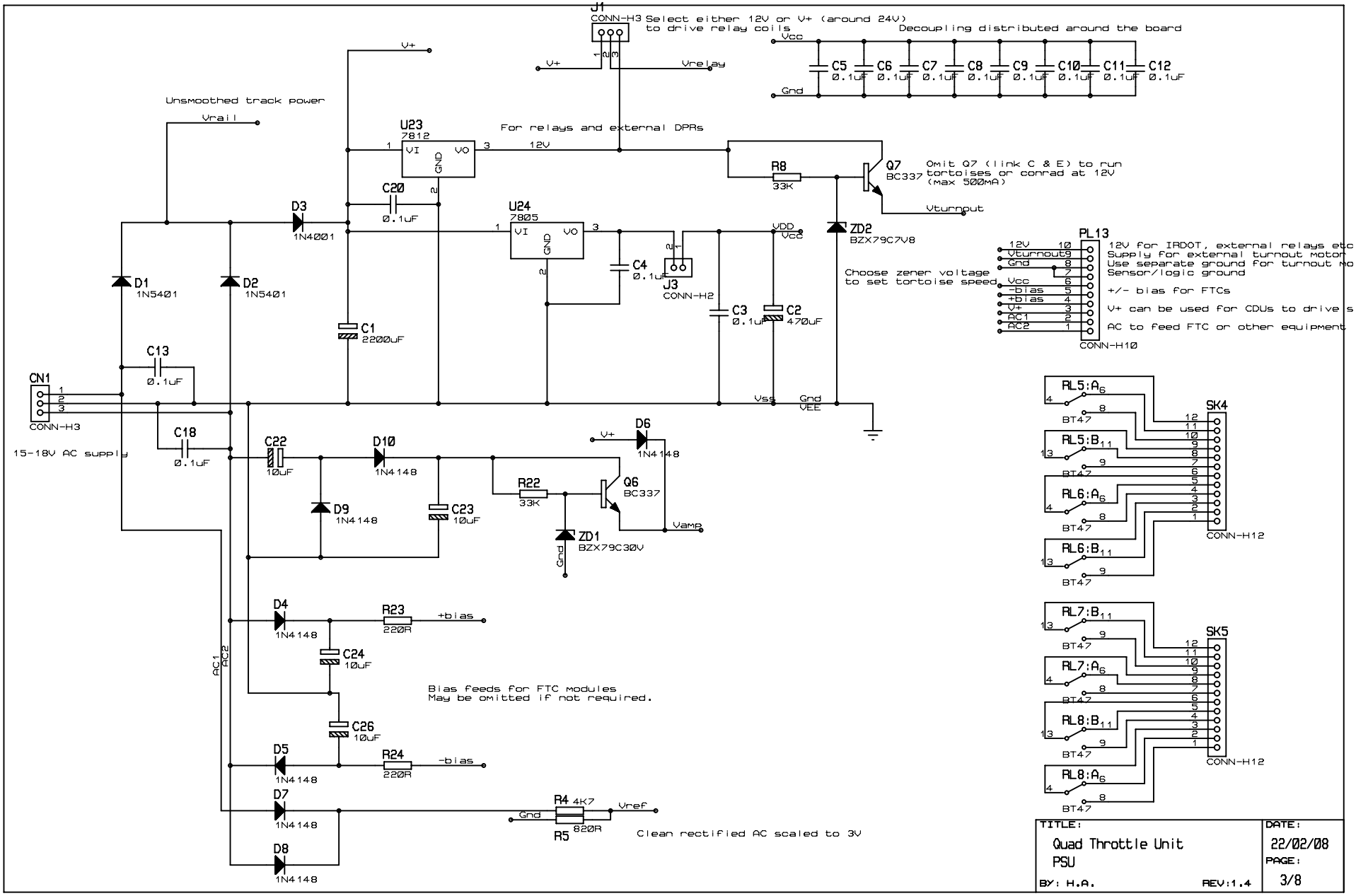
J1
CONN-H3
Select either 12V or V+ (around 24V)
to drive relay coils
Decoupling distributed around the board
Vcc
Gnd
C5 0.1uF
C6 0.1uF
C7 0.1uF
C8 0.1uF
C9 0.1uF
C10 0.1uF
C11 0.1uF
C12 0.1uF
V+
Vrelay
Unsmoothed track power
Vrail
U23
7812
VI
VO
GND
For relays and external DPRs
12V
R8
33K
Q7
BC337
Omit Q7 (link C & E) to run
tortoises or conrad at 12V
(max 500mA)
Vturnout
C20
0.1uF
D3
1N4001
U24
7805
VDD
Vcc
ZD2
BZX79C7V8
C4
0.1uF
J3
CONN-H2
D1
1N5401
D2
1N5401
C1
2200uF
C3
0.1uF
C2
470uF
Choose zener voltage
to set tortoise speed
PL13
12V
Vturnout
Gnd
Vcc
-bias
+bias
V+
AC1
AC2
CONN-H10
12V for IRDOT, external relays etc
Supply for external turnout motor
Use separate ground for turnout mo
Sensor/logic ground
+/- bias for FTCs
V+ can be used for CDUs to drive s
AC to feed FTC or other equipment
C13
0.1uF
CN1
CONN-H3
15-18V AC supply
C18
0.1uF
Vss
Gnd
VEE
C22
10uF
D10
1N4148
D6
1N4148
R22
33K
Q6
BC337
Vamp
D9
1N4148
C23
10uF
ZD1
BZX79C30V
Gnd
RL5:A6
RL5:B11
RL6:A6
RL6:B11
BT47
SK4
CONN-H12
RL7:B11
RL7:A6
RL8:B11
RL8:A6
SK5
CONN-H12
D4
1N4148
R23
220R
+bias
C24
10uF
Bias feeds for FTC modules
May be omitted if not required.
C26
10uF
D5
1N4148
R24
220R
-bias
D7
1N4148
R4 4K7
Vref
Gnd
R5 820R
Clean rectified AC scaled to 3V
D8
1N4148
AC1
AC2
TITLE:
Quad Throttle Unit
PSU
BY: H.A.
REV:1.4
DATE:
22/02/08
PAGE:
3/8